PRODUCT DATA SHEET
TR200014.r6

ADVECO
HOT WATER SPECIALISTS

SST 200-2500

Stainless Steel Twin-Coil Cylinders for DHW Applications

The Adveco range of stainless steel domestic hot water tanks includes models suitable for use as hot water buffers, single coil, or dual coil calorifiers as required for the job.

The SST range of twin-coil cylinders is supplied with a pair of independent internal stainless steel heat exchange coils to serve domestic hot water systems. Each coil can be used with a separate heat source, enabling the effective integration of renewable technologies, or can alternatively be combined to increase the heat transfer capacity from a single source. All vessels can also be fitted with a backup electric heating element to grant a level of redundancy to a system in the event of a heat source failure.

The complete range of tanks are WRAS certified, and are designed and manufactured to the requirements of the Pressure Equipment Directive (97/23/EC) and are tested to the procedure defined in BS EN 12897:2006.

FEATURES

- Available with 200 - 2500 litre capacities
- Produced from high quality stainless steel
- 2 separate internal heat exchange coil
- Renewables ready, or very high capacity indirect system
- 100-130 mm removable insulation for improved energy efficiency
- Suitable for vented or unvented installation
- Immersion heaters available from 3 - 36 kW
- 6 bar / 85°C max. working pressure/temp (tank)
- 12 bar / 110°C max. working pressure/temp (coil)

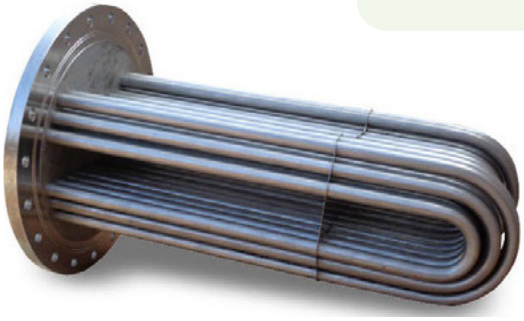

WRAS
APPROVED PRODUCT
CERTIFICATION MARK

ADVECO
HOT WATER SPECIALISTS

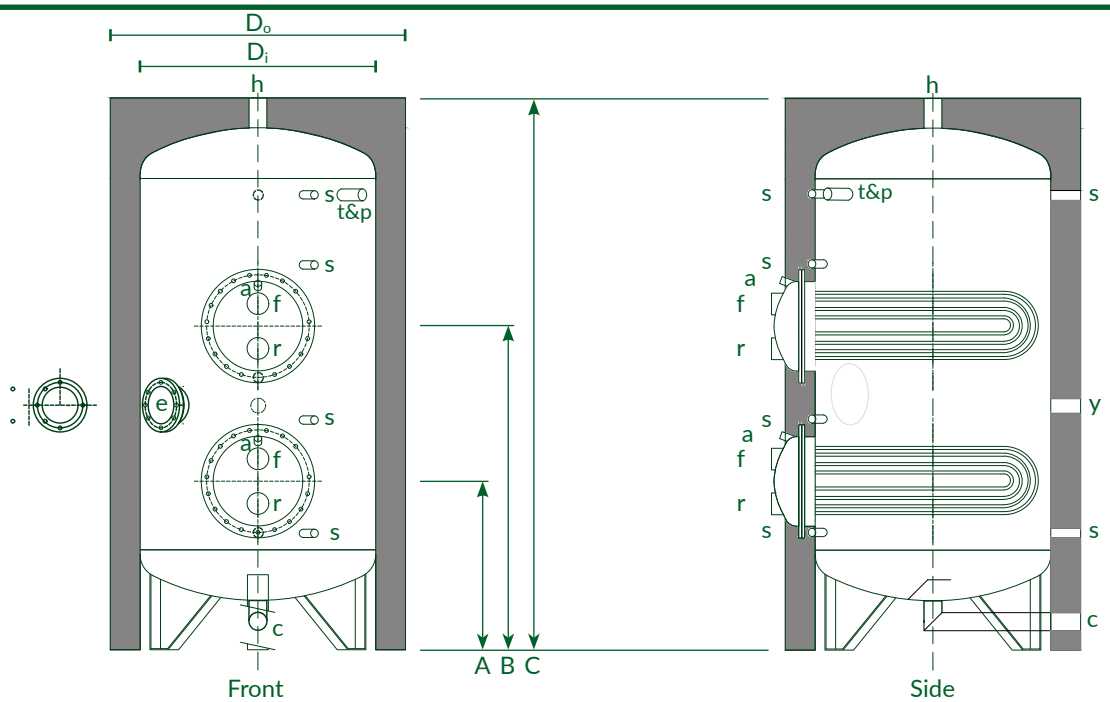

Model		units	SST 200/1.0	SST 300/1.0	SST 500/1.5	SST 800/1.5	SST 800/3.0	SST 1000/5.0	SST 1500/4.0	SST 1500/6.0	SST 2000/4.0	SST 2000/6.0	SST 2500/4.0	SST 2500/6.0
Volume		L	184	279	470	752	748	918	1399	1387	1975	1963	2508	2496
D_o		mm	650	700	850	1050	1050	1050	1260	1260	1510	1510	1660	1660
D_i		mm	450	500	650	790	790	790	1000	1000	1250	1250	1400	1400
A		mm	445	465	485	595	595	545	620	620	690	690	730	730
B		mm	875	965	985	1115	1115	1135	1210	1210	1330	1330	1370	1370
C		mm	1445	1735	1785	1865	1865	2195	2250	2250	2090	2090	2180	2180
c, h	Water Inlet/ Outlet	inch	1.25	1.50	1.50	2.00	2.00	2.00	2.00	2.00	2.00	2.00	2.50	2.50
y	Secondary	inch	1.50	1.50	1.50	1.50	1.50	1.50	1.50	1.50	1.50	1.50	1.50	1.50
s	Sensor	inch	0.75	0.75	0.75	0.75	0.75	0.75	0.75	0.75	0.75	0.75	0.75	0.75
t&p	Temperature & Pressure Relief	inch	1.00	1.00	1.00	1.00	1.00	1.50	1.50	1.50	1.50	1.50	1.50	1.50
e	Immersion Port	inch, mm	2.25"	2.25"	180	180	180	180	180	180	180	180	180	180
a	Air Relief (Coil)	inch	⅜	⅜	⅜	⅜	⅜	⅜	⅜	⅜	⅜	⅜	⅜	⅜
f/r	Primary Flow/ Return	inch	1.00	1.00	2.00	2.00	2.00	2.00	2.00	2.00	2.00	2.00	2.00	2.00
Standing losses		W kWh/24h	75 1.8	96 2.3	100 2.4	120 2.9	120 2.9	143 3.4	158 3.8	158 3.8	190 4.5	190 4.5	208 4.9	208 4.9
Energy Efficiency Class			C	C	C	C	C	C	C	C	C	C	C	C
Empty mass		kg	93	101	144	179	201	257	303	333	378	408	478	508
Each Coil	Surface Area	m²	1.0	1.0	1.5	1.5	3.0	5.0	4.0	6.0	4.0	6.0	4.0	6.0
	Volume	L	3.5	3.5	5.5	5.5	10.0	16.7	13.5	20	13.5	20	13.5	20
	Maximum Pressure	bar	12	12	12	12	12	12	12	12	12	12	12	12
Top Coil (80/60°C)	Nominal Capacity	kW	18	18	27	27	54	90	72	108	72	108	72	108
	Primary Flow Rate	L/s	0.25	0.25	0.38	0.38	0.75	1.25	1.00	1.50	1.00	1.50	1.00	1.50
	Pressure Drop	mbar	3	3	5	5	8	19	10	25	10	25	10	25
	DHW Recovery	L/h	309	309	463	463	927	1544	1236	1853	1236	1853	1236	1853
	DHW Peak 1hr Flow	L	377	425	663	804	1227	1885	1840	2404	2128	2692	2394	2959
Bottom Coil (80/60°C)	Nominal Capacity	kW	18	18	27	27	54	90	72	108	72	108	72	108
	Primary Flow Rate	L/s	0.25	0.25	0.38	0.38	0.75	1.25	1.00	1.50	1.00	1.50	1.00	1.50
	Pressure Drop	mbar	3	3	5	5	8	19	10	25	10	25	10	25
	DHW Recovery	L/h	309	309	463	463	927	1544	1236	1853	1236	1853	1236	1853
	DHW Peak 1hr Flow	L	432	508	804	1029	1450	2160	2260	2820	2720	3281	3147	3708
Combined Coils (80/60°C)	Nominal Capacity	kW	36	36	54	54	108	180	144	216	144	216	144	216
	Primary Flow Rate	L/s	0.50	0.50	0.75	0.75	1.50	2.50	2.00	3.00	2.00	3.00	2.00	3.00
	Pressure Drop	mbar	12	12	20	20	32	75	40	100	40	100	40	100
	DHW Recovery	L/h	618	618	927	927	1853	3089	2471	3707	2471	3707	2471	3707
	DHW Peak 1hr Flow	L	717	793	1231	1457	2305	3586	3400	4531	3861	4992	4287	5418

Ancillaries: All models

Control Thermostat: E0008/0-95C	Overheat Thermostat: E0011
Thermostat Pocket: E0009.2 (2× included with vessel)	Destratification Pump Kit: MB0001
Unvented Kits: Contact Adveco for details	Electric Immersion Heaters: Contact Adveco for details

Adveco Ltd. Unit 7&8 Armstrong Mall, Southwood Business Park, Farnborough, Hampshire GU14 0NR
Company Reg : 09493966 T : 01252 551 540 E : enquiries@adveco.co I : www.adveco.co

The WRAS Approved Product Certification Mark is registered property of Water Regulations Advisory Scheme Limited (WRAS Ltd.)